NO. 0073 Apron

Description (measured in cm)	One size
III: Height	90
JJJ: Bottom width	70

How to measure

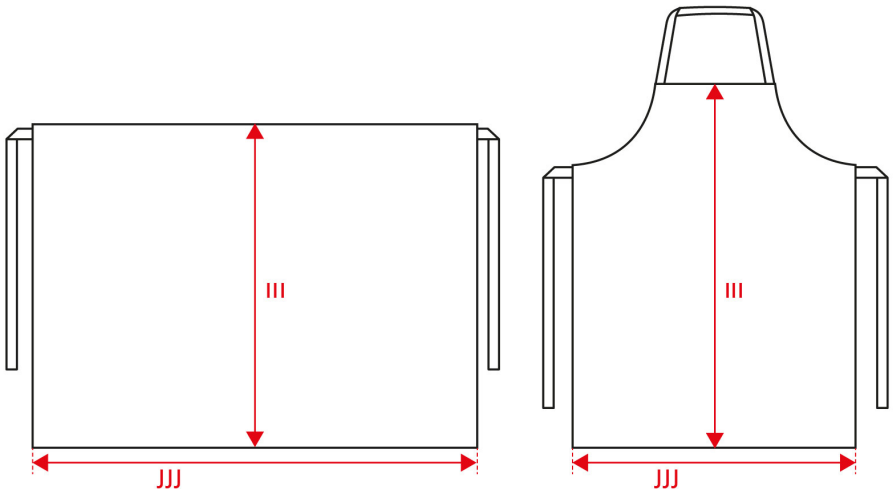

Tolerance in cm

III	JJJ
1.5	1.5

The measurements in a product measurement chart refer to measurements made directly on the clothing. Lay the garment out flat on an even surface without stretching it. Take the measurements as shown by the arrows and select the size that fits. Use a tape measure for the best results. The tolerances in the measurement chart are based on when the item is received from ID® and not after washing. We reserve the right to make mistakes and omissions in the chart. You are always welcome to contact us for further guidance on using our product measurement chart at support@id.dk or tel: +45 97492144